ALGORITMO LED SYSTEM - RECESSED WITH TRIM

LAYOUT

Design Carlotta de Bevilacqua, Paola di Arianello

SYSTEM CONFIGURATION EXAMPLE

Compose your system with the help of the example below. All components can be found on the following pages and need to be ordered separately.

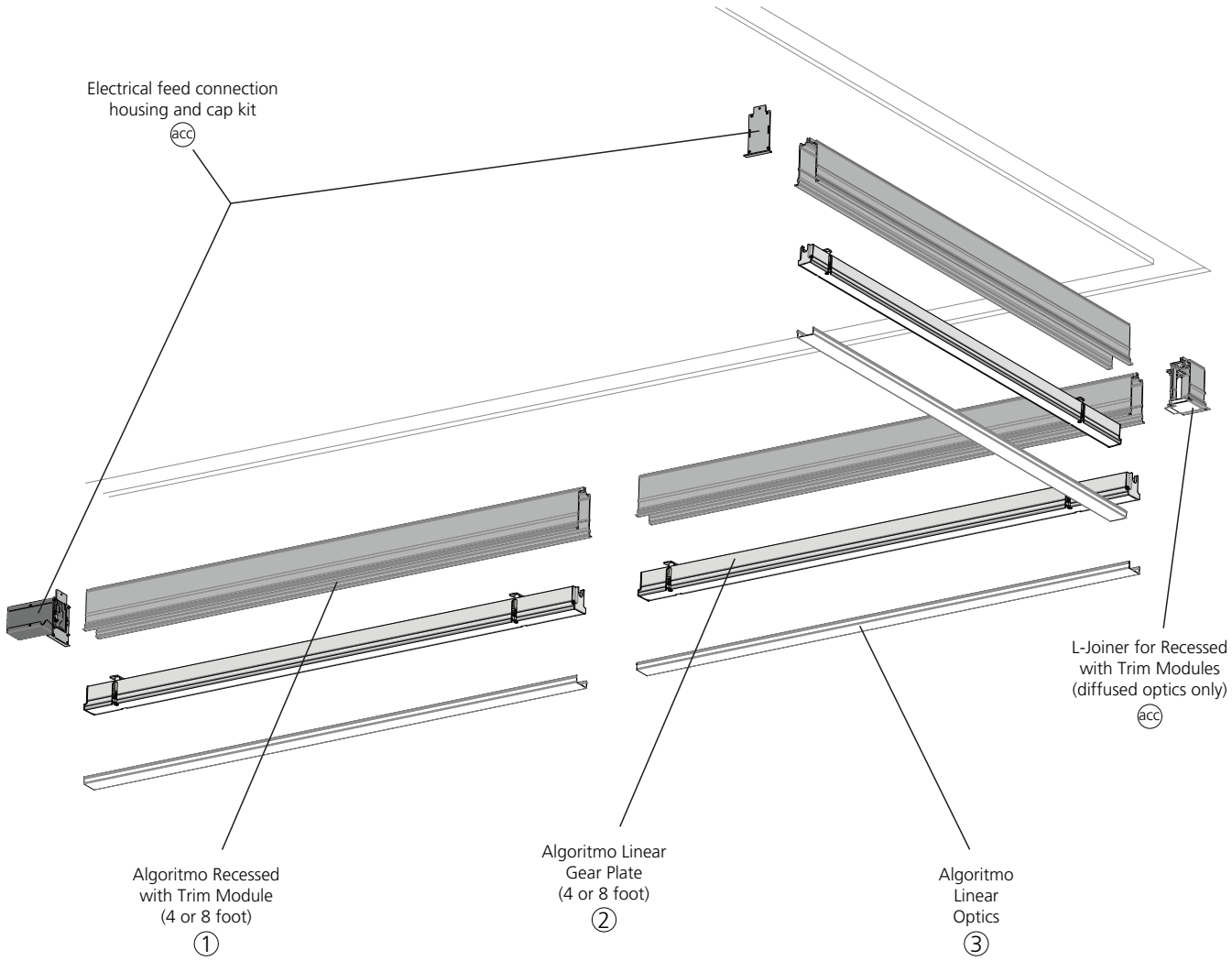

1 Pick your Algoritmo Recessed modules
2 Pick your Linear Gear Plate
3 Pick your corresponding Linear Optics
acc Pick your accessories

We reserve the right to change specifications of our products (designs, materials and finishes).
For the latest product information, please contact: USA: 631-694-9292, Canada: 514-323-6537 or at www.artemide.net
2017 © Artemide | All rights reserved

ALGORITMO LED SYSTEM - RECESSED WITH TRIM

BODY

Design Carlotta de Bevilacqua, Paola di Arianello

CODE

#CAT	MOUNTING	LENGTH	COLOR
USC-MAL	**TR**	___	___

QUANTITY

Mounting	**TR =** Recessed with Trim
Length	**4 =** 4 Feet **8 =** 8 Feet
Trim color	**B =** Black **S =** Silver **W =** White

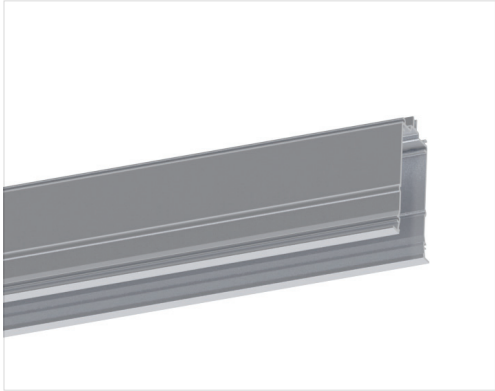

FEATURES:

Construction: Modular structural body in extruded aluminum with powder coat finish.

Mounting: Mounts to ceiling (hardware not included). Suitable for ceiling thickness 5/8″ maximum. Height clearance 4 1/4″ min. Gear Plate, Linear diffuser optics and other accessories sold separately; see following pages.

Notes: For all other finishes, lengths and custom requests, please contact your local Artemide sales representative.

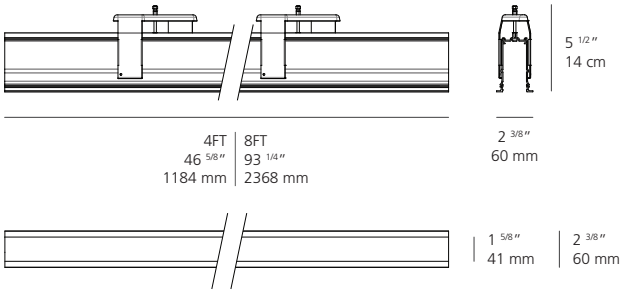

We reserve the right to change specifications of our products (designs, materials and finishes).
For the latest product information, please contact: USA: 631-694-9292, Canada: 514-323-6537 or at www.artemide.net
2017 © Artemide | All rights reserved

ALGORITMO LED SYSTEM - RECESSED WITH TRIM

GEAR PLATE

Design Carlotta de Bevilacqua, Paola di Arianello

CODE

#CAT	TYPE	EMISSION	LENGTH	CRI	CCT	DRIVER
USC-MAL	**G**	**D**	___	**8**	___	___

QUANTITY

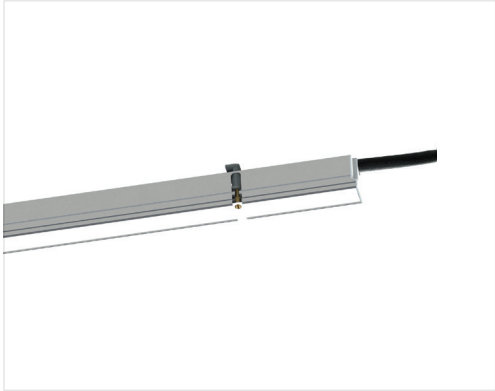

Type	**G =** Gear Plate
Emission	**D =** Direct
Length	**4 =** 4 Feet **8 =** 8 Feet
CRI	**8 =** 80 CRI min
CCT	**30 =** 3000K **35 =** 3500K **40 =** 4000K
Driver	**08 =** On/Off + 0-10V dim (120/277V) **15 =** On/Off + 0-10V dim (347V) **DU =** DALI (120/277V)

TECHNICAL DATA: (80 CRI 3000K model ratings)

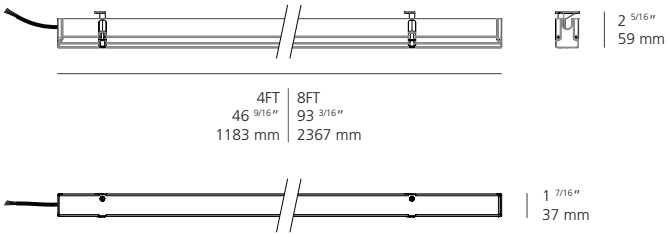

Lamping: Internal gear plate with LED driver and linear LED array mounted on an independent heatsink for better heat dissipation. 3-step MacAdam ellipse.

Notes: Max rating for cumulative gear plates in a system: 6A per circuit. For custom requests, please contact your local Artemide sales representative.

Label: c UL us - suitable for dry locations

	ALGORITMO SYSTEM 80CRI 3000K					
	4FT DIRECT EMISSION			8FT DIRECT EMISSION		
Input Power:	34W			68W		
Input Current:	120VAC		277VAC	120VAC		277VAC
	0.28A		0.12A	0.57A		0.25A
Nominal Lumen:	4480lm			8960lm		
Delivered Lumen:	Controlled	Diffused	Prismoptic	Controlled	Diffused	Prismoptic
	1568.6lm	1960.7lm	2527.1lm	3137.2lm	3921.4lm	5054.2lm
Efficacy (lm/W):	46.1lm/W	57.7lm/W	74.3lm/W	46.1lm/W	57.7lm/W	74.3lm/W
Efficiency (%):	35.0%	43.8%	56.4%	35.0%	43.8%	56.4%

See following page for optics specifications and description.

We reserve the right to change specifications of our products (designs, materials and finishes).
For the latest product information, please contact: USA: 631-694-9292, Canada: 514-323-6537 or at www.artemide.net
2017 © Artemide | All rights reserved

ALGORITMO LED SYSTEM - RECESSED WITH TRIM

LINEAR OPTICS

Design Carlotta de Bevilacqua, Paola di Arianello

CONTROLLED EMISSION OPTICS

#CAT	LENGTH	QUANTITY
USC-MALDC	___	

Length	**04 =** 4 Feet **08 =** 8 Feet

Injection-molded polycarbonate snap-in diffuser, with precise optical lens array for glare and emission control. Provides a narrower beam.

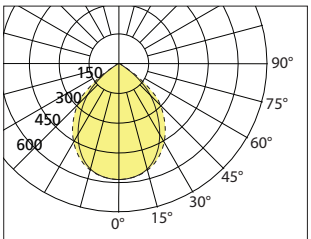

Max Candela = 582.43cd/klm
3000k 80CRI min.

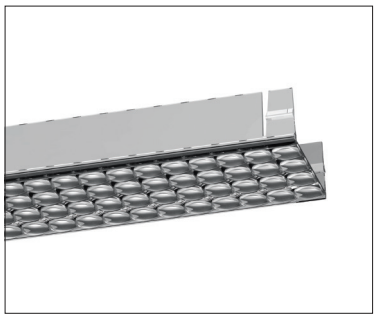

DIFFUSED OPTICS

#CAT	LENGTH	QUANTITY
USC-MALDD	___	

Length	**04 =** 4 Feet **08 =** 8 Feet **12 =** 12 Feet*

Extruded polycarbonate snap-in diffuser, opal white color. Prevents LED pixelation with it's soft uniform glow.

*12 foot diffuser allows for longer linear sections without interruption

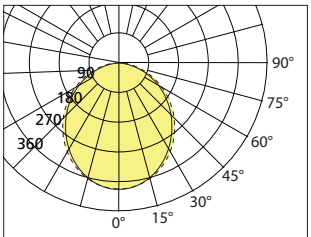

Max Candela = 382.79cd/klm
3000k 80CRI min.

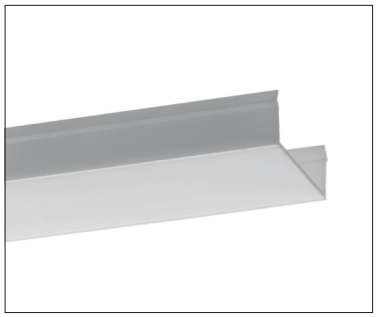

PRISMOPTIC LENS OPTICS

#CAT	LENGTH	QUANTITY
USC-MALDP	___	

Length	**04 =** 4 Feet **08 =** 8 Feet

Extruded polycarbonate snap-in diffuser, with light-guiding grid. Controls glare by altering the angle of incidence of the ray, therefore minimizing output loss.

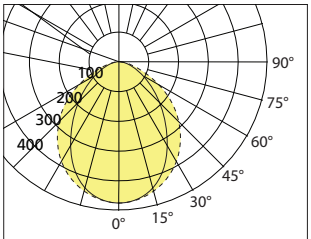

Max Candela = 470.35cd/klm
3000k 80CRI min.

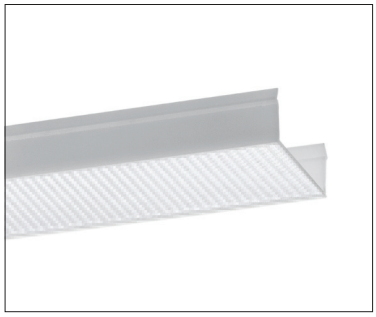

We reserve the right to change specifications of our products (designs, materials and finishes).
For the latest product information, please contact: USA: 631-694-9292, Canada: 514-323-6537 or at www.artemide.net
2017 © Artemide | All rights reserved

ALGORITMO LED SYSTEM - RECESSED WITH TRIM

ACCESSORIES

Design Carlotta de Bevilacqua, Paola di Arianello

ELECTRICAL FEED CONNECTION HOUSING AND END CAP KIT FOR RECESSED WITH TRIM MODULES

#CAT	COLOR
USC-MALTRFK	___

QUANTITY

Color	**B =** Black **S =** Silver **W =** White

Allows electrical connection of an armored cable (BX) to the module. Includes color-matched end plates to cap the ends of a system configuration. Maximum number of modules per feed must not exceed 6A.

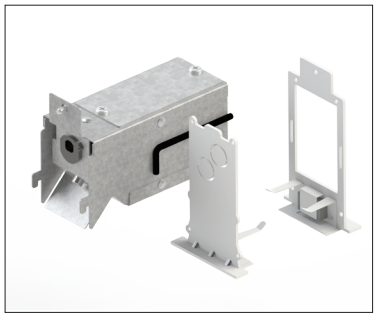

L-JOINER HORIZONTAL FOR RECESSED WITH TRIM MODULES (IN DIFFUSED OPTICS ONLY)

#CAT	COLOR
USC-MALTR9HD	___

QUANTITY

Color	**B =** Black **S =** Silver **W =** White

Allows horizontal 90 degree connection of 2 modules. Comes in color-matched powder coat paint. Includes light-transmittive diffused optics corner for an almost seamless connection.

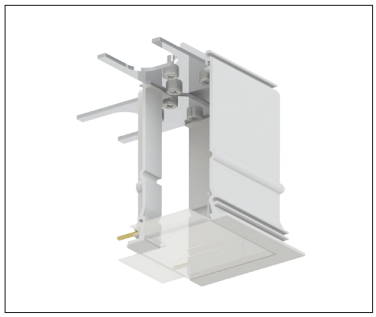

L-JOINER VERTICAL FOR RECESSED WITH TRIM MODULES (IN DIFFUSED OPTICS ONLY)

#CAT	COLOR
USC-MALTR9VD	___

QUANTITY

Color	**B =** Black **S =** Silver **W =** White

Allows vertical 90 degree connection of 2 modules. Comes in color-matched powder coat paint. Includes light-transmittive diffused optics corner for an almost seamless connection.

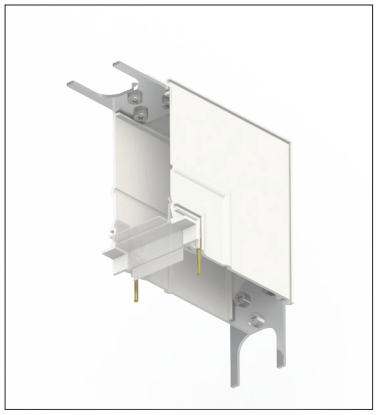

We reserve the right to change specifications of our products (designs, materials and finishes).
For the latest product information, please contact: USA: 631-694-9292, Canada: 514-323-6537 or at www.artemide.net
2017 © Artemide | All rights reserved